Panda MICROWAVE DC to 70 GHz ISO9001 Broadband RF Components

50 Ohm 15dBm SMA-Female Low Noise Amplifier From 6 to 18GHz Rated at Gain 20dB

Low Noise Amplifier

ESD	ESD Sensitive Material
Max Input Power	10dBm
Freq. Range	6 to 18 GHz
P / N	LA060180-G20P15_B
ID	LA00072

6 to 18GHz 15dBm LNA Technical Data Sheet LA060180-G20P15_B

Features

- Design : Micropackaging
- Stainless Steel Connectors
- Output Power 15 dBm
- Low Noise Figure
- RoHS and REACH Compliant
- Low Input and Ouput VSWR

Electrical Specifications (Design : Micropackaging)

Description	Minimun	Typical	Maximum	Units	Condition
Freq. Range	6		18	GHz	
Max input Power			10	dBm	
Small Signal Gain	20			dB	
Gain Flatness			±1.5	dB	
Noise figure			2.5	dB	Test Temp. : +25℃
OIP3			-	dBm	
Input VSWR			2.0		
Output VSWR			2.0		
Output Power	15			dBm	1dB compression point
DC Voltage		+12		Volts	
DC Current		200		mA	
TTL		/		Volts	/
Operating Temp.	-55		+85	℃	Relative Humidity 5 to 95%
Additional Conditions	Gain : 22dB Type				

#1 : Electronic Specification Note : Values at 25deg , sea level. Test indicators will deteriorate at high and low temperature ;

#2 : ESD sensitive material , Transport material in approved ESD bags. Handle only in approved ESD workstation;

3 : Providing effective cooling measures and electrostatic protection;

4 : If the product is damaged due to over-drive, no-load, over-temperature, over-current and static electricity in use. Customer needs to pay for the cost of maintenance.

Panda Microwave Limited (HK) / Chengdu Panda Microwave Technology Co., Ltd

Tel : 86-28-85686213 or 83172805 Add : Chengdu 610000 CHINA

E-mail : info@pandamw.com Website : Https://pandamw.com

Download :

Products Catalog 2020-V1

Panda MICROWAVE DC to 70 GHz ISO9001 Broadband RF Components

50 Ohm 15dBm SMA-Female Low Noise Amplifier From 6 to 18GHz Rated at Gain 20dB

Biasing Up Procedure

Step 1	Connect Ground Pin
Step 2	Connect input and output
Step 3	Connect +12V biasing

Power OFF Procedure

Step 1	Turn off +12V biasing
Step 2	Remove RF connection
Step 3	Remove Ground

Mechanical Specifications

Description	Specification	Note
Cavity Material	Aluminum	
ESD	ESD Sensitive Material	
Dimension L*W*H	34.4*16.8*16 mm	
Input Connector	SMA-Female	Stainless Steel
Output Connectors	SMA-Female	Stainless Steel
VDC Connectors		
Weight	25 g	
Finishing	Nickel Plated	
Environment	X	Nominal
RoHS and REACH Compliant	√	

Outline Drawing

Dimensions are in mm [Inches]

Tolerances : Outline drawing: ±0.2 [0.008],

Hole: ±0.2 [0.008]

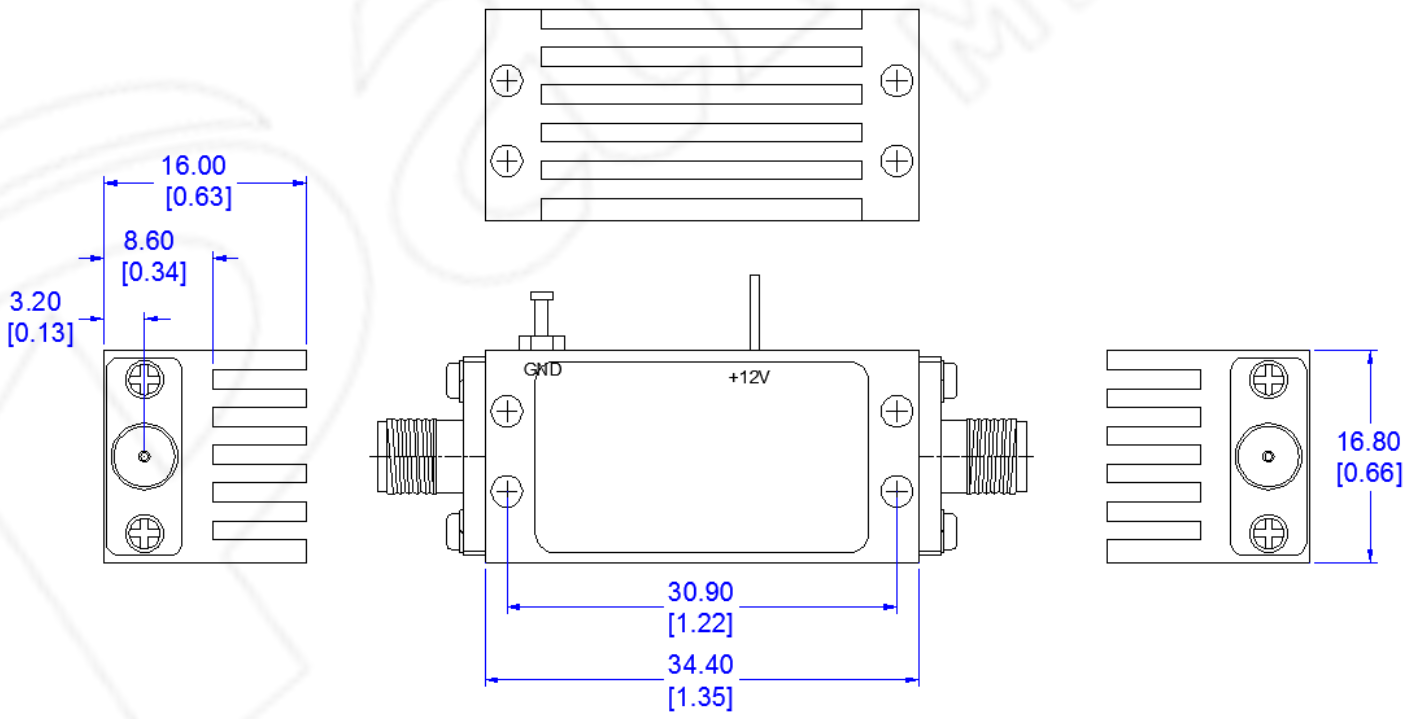

Panda Microwave Limited (HK) / Chengdu Panda Microwave Technology Co., Ltd

Tel : 86-28-85686213 or 83172805 Add : Chengdu 610000 CHINA

E-mail : info@pandamw.com Website : Https://pandamw.com

Download :

Products Catalog 2020-V1